Tagra | PISB24 | 22.2x5mm | Roll On LED Diffuser | Silicone |Opal | 20M

DIFSIL-PLSTD-20M-OPAL / ITM002654



Datasheet

13-11-2026

www.tagra-lighting.co.uk

support@tagra-lighting.co.uk

Tagra | PISB24 | 22.2x5mm | Roll On LED Diffuser | Silicone |Opal | 20M



Length	Material	Warranty
20m	PC	5 Years

SKU: DIFSIL-PLSTD-20M-OPAL
ITM: ITM002654

Key Features:

- **Product Length:** 20m
- **Diffuser Colour:** Opal
- **Dimensions (W x H):** 22 x 5mm

Mechanical Data			
Diffuser Shape:	Flat	**Illuminated Surface Width:**	23.6mm
Max. LED Strip Light Width:	20mm	**Dimensions (LxWxH):**	20000 x 22 x 5mm

Photometric Data			
Beam Angle:	105°	**Diffuser Colour:**	Opal

Environmental Data			
Body Finish:	Plastic	**Body Material:**	Polycarbonate
Ingress Protection (IP):	IP20	**Mounting Type:**	Plaster In

Dimension Drawing

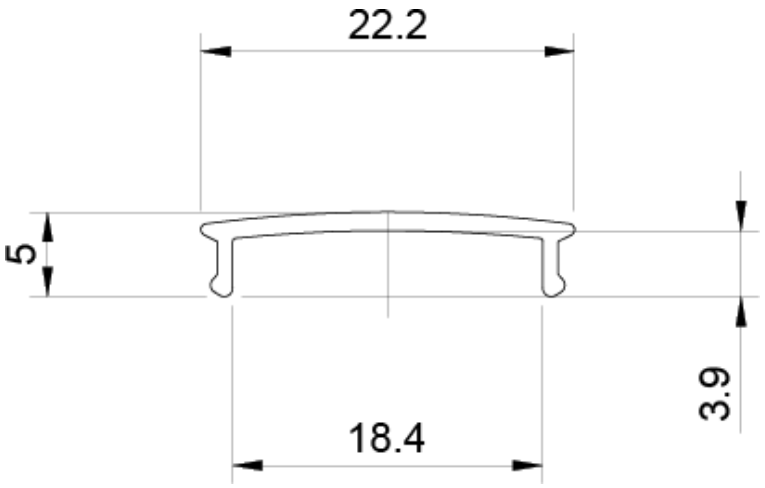

Packaging Data

Items / Sets Per Pack:	1	**Packaging Height:**	22mm
Packaging Length:	480mm	**Packaging Width:**	450mm
Packaging Weight:	2019.25g		

Disclaimer

Tagra Lighting have taken reasonable care to ensure that the information in this datasheet is accurate at time of publication however it should be noted that all specifications are subject to tolerance. Descriptive specifications such as colour are subjective. Tagra Lighting reserve the right to update specifications without notice. The information in the datasheet may only be relied on by customers of Tagra Lighting in accordance with applicable terms and conditions.

Tagra Lighting is a trading name of T.R Ventures Limited, a company incorporated in England with registered number 07757720. Our registered office is Unit 2, Southfield Industrial Estate, Trafford Park, M17 1SJ.

www.tagra-lighting.co.uk

support@tagra-lighting.co.uk